Process Capable

RoHS Compliant 2002/95/EC

REV.	ECN. NO.	APPD.

DIMENSIONS

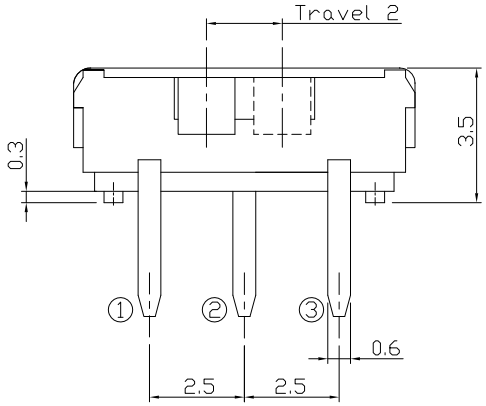

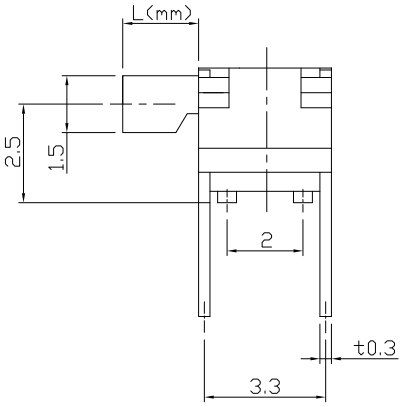

CIRCUIT DIAGRAM

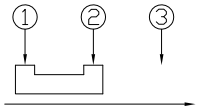

PRODUCT IMAGE

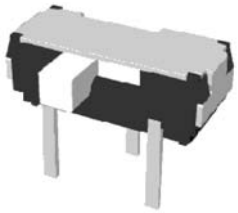

MODEL CODE

AS-1245 □ - B

L	(mm)
–	2.0
A	4.0
B	3.0

Knob Color	
B	Black
W	White

P.C.B MOUNTING PATTERN DIMENSION

The following soldering patterns are recommended for reflow soldering

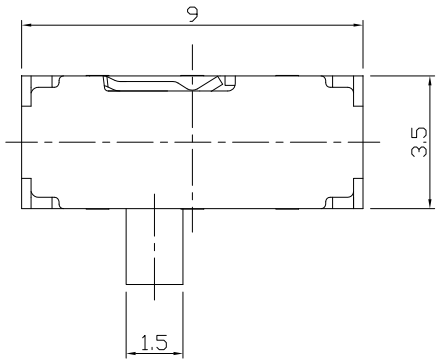

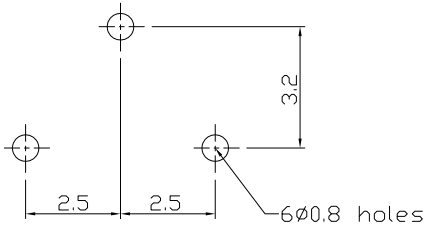

ELECTRO-MECHANICAL CHARACTERISTICS

Refer to additional specifications

Rating	DC 6V 0.3A
Circuit	1C-2P
Contact Resistance	70mΩ Max.
Travel	2.0 ± 0.3mm
Operating Force	200±100gf
Operating Life(cycles)	10,000

.X ±0.2	X. ±2°
UNITS	mm
MAT'L	SEE NOTE
FINISH	SEE NOTE
Q'TY	

THESE DRAWINGS AND SPECIFICATIONS ARE THE PROPERTY OF ACCURATE INNOTECH INC AND SHALL NOT BE REPRODUCED, COPIED OR USED IN ANY MANNER WITHOUT THE PRIOR WRITTEN CONSENT OF ACCURATE INNOTECH INC.

雅安科技有限公司
ACCURATE INNOTECH INC.

TITLE: MINI SLIDE SWITCH	PART NO.: AS-1245 SERIES
DR: Ricky 2024/03/22	DWG NO.: ASI-1245
CHKD: Ricky 2024/03/22	
APPD:	

SCALE	SHEET	REV.	
1:1	1/1	A	CUSTOMER DRAWING