Pb Process Capable

RoHS Compliant 2002/95/EC

REV.	ECN. NO.	APPD.

DIMENSIONS

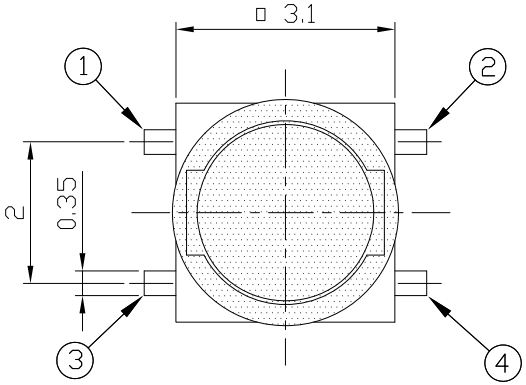

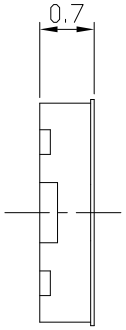

CIRCUIT DIAGRAM

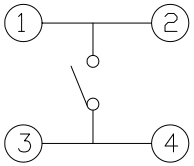

PRODUCT IMAGE

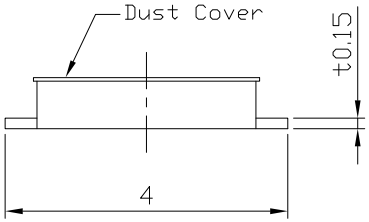

P.C.B MOUNTING PATTERN DIMENSION

The following soldering patterns are recommended for reflow soldering

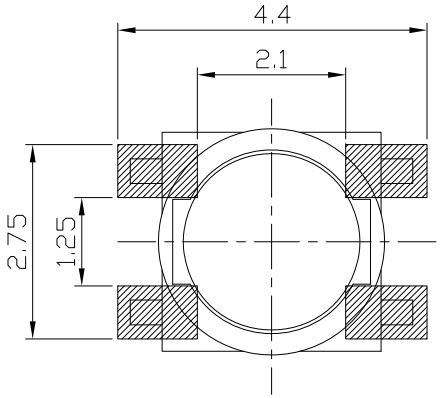

ELECTRO-MECHANICAL CHARACTERISTICS

Refer to additional specifications

Rating	DC 12V 50mA	
Contact Resistance	100mΩ Max.	
Travel	0.15 ± 0.1mm	
Operating Force	160±30gf	250±50gf
Operating Life(cycles)	100,000	

.X ±0.2	X. ±2°	UNITS mm	雅安科技有限公司 ACCURATE INNOTECH INC.
		MAT'L SEE NOTE	TITLE: TACT SWITCH / PART NO.: AT-1184C SERIES
		FINISH SEE NOTE	DR: Ricky 2014/03/28 / DWG NO.: ASI-1184C
		Q'TY	CHKD: Ricky 2014/03/28
			APPD:

SCALE 1:1 | SHEET 1/1 | REV. A | CUSTOMER DRAWING

THESE DRAWINGS AND SPECIFICATIONS ARE THE PROPERTY OF ACCURATE INNOTECH INC AND SHALL NOT BE REPRODUCED, COPIED OR USED IN ANY MANNER WITHOUT THE PRIOR WRITTEN CONSENT OF ACCURATE INNOTECH INC.