Pb Process Capable

RoHS Compliant 2002/95/EC

REV.	ECN. NO.	APPD.

DIMENSIONS

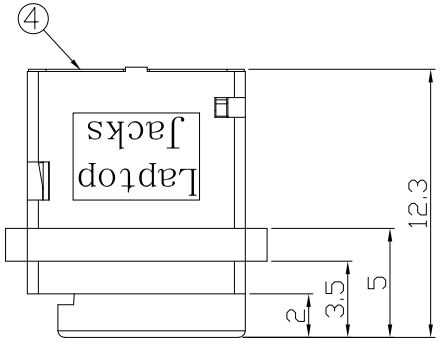

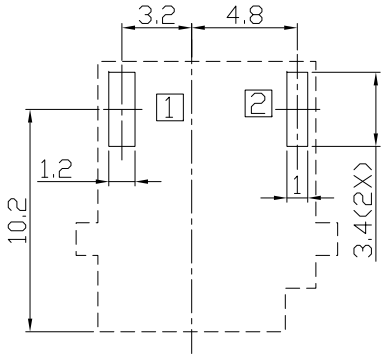

P.C.B Layout
(Printed-side view)

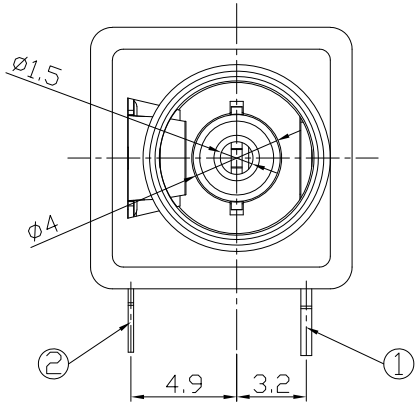

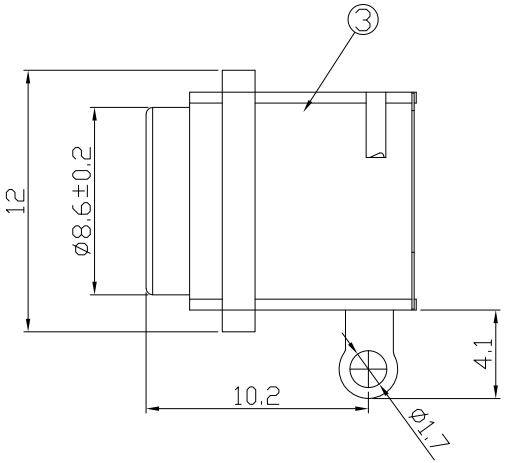

MODEL CODE:

DCB0-0037C- B F 66 BK T 0 4
(1) (2) (3)(4) (5) (6) (7)(8) (9)

(1):Series type:DIP DC POWER JACK.
(2):Series No.
(3):Schematic option: B
(4):Center pin diameter:
F=Ø1.45
(5):Material of housing:
66=PA66
(6):Housing color:
BK=Black (Standard)
(7):Terminal plating
T=Tin(Sn)
(8):Special option:
0=No special option
(9):Packing mode:
4=Bag packing

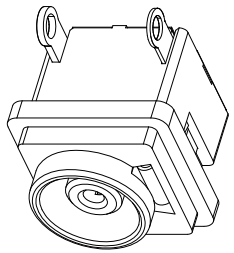

SPECIFICATION:

1.Rating : DC 30V 1A;
2.Contact resistance: ≤30mΩ;
After test:≤50mΩ
3.Insulation resistance: ≥100MΩ (DC250V);
After test:≥50MΩ
4.Withstand voltage: 500VAC ;
5.Insertion and extraction force: 3-30N;
6.life test: 5,000 cycles;
7.Operation temperature range:-20°C~70°C;
8.Preservative temperature range:-40°C~85°C;

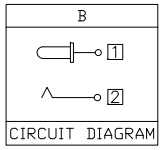

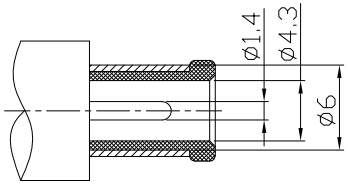

DC MATE PLUG

○: ITEM NO. □: TERMINAL NO.

NO.	PARTS	MATERIAL	Q'TY	FINISHING
④	Cover	PP UL-94V-0	1	Black
③	Housing	PA66+15%GF UL-94V-0	1	Black
②	Spring	Bronze t=0.25	1	Sn-Plating
①	Pin	Bronze t=0.5	1	Sn-Plating

TOLERANCE		ANGLES	
.X	±0.38	X	±5°
.XX	±0.30	.X	±3°
.XXX	±0.15	.XX	±2°

THESE DRAWINGS AND SPECIFICATIONS ARE THE PROPERTY OF ACCURATE INNOTECH INC AND SHALL NOT BE REPRODUCED, COPIED OR USED IN ANY MANNER WITHOUT THE PRIOR WRITTEN CONSENT OF ACCURATE INNOTECH INC.

UNITS mm
MAT'L SEE NOTE
FINISH SEE NOTE
Q'TY

雅安科技有限公司
ACCURATE INNOTECH INC.

TITLE: DIP DC POWER JACK	PART NO.: DCB0-0037C
DR: Ricky 2019/04/12	DWG NO.: AB0-0037C
CHKD: Ricky 2019/04/12	SCALE 1:1 / SHEET 1/1 / REV. A / CUSTOMER DRAWING
APPD:	