Pb Process Capable

RoHS Compliant 2002/95/EC

REV.	ECN. NO.	APPD.

DIMENSIONS

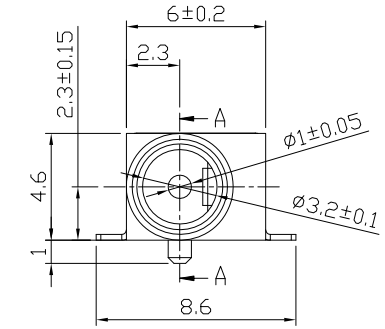

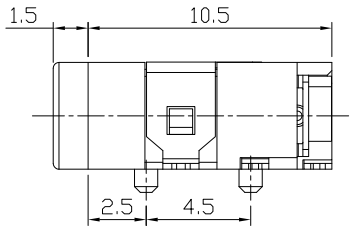

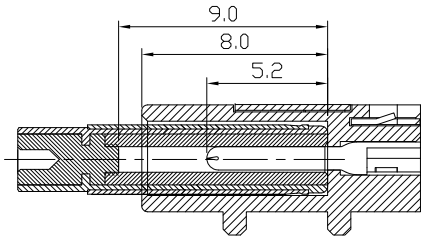

SEC:A-A

MODEL CODE:

DCB0-00520- A C 9T BK S 0 1

(1) (2) (3)(4) (5) (6)(7)(8) (9)

(1):Series type:SMD DC POWER JACK.
(2):Series No.
(3):Schematic option: A,B
(4):Center pin diameter:
C=ø1.0
(5):Material of housing:
9T=PA9T(Standard)
(6):Housing color:
BK=Black(Standard)
(7):Terminal plating:
S=Silver(Ag), G=Gold(Au)
(8):Special option:
0=No special option
(9):Packing mode:
1=Reel packing

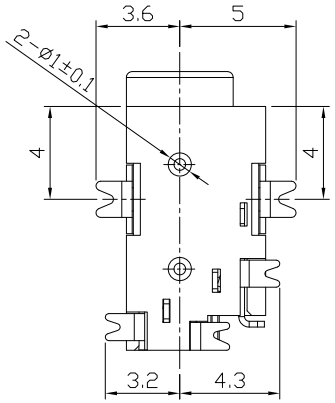

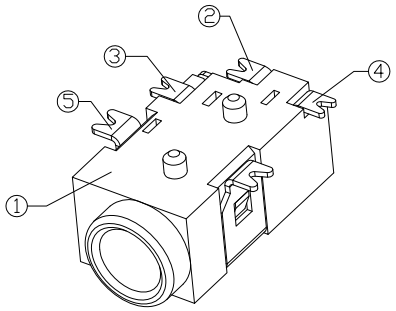

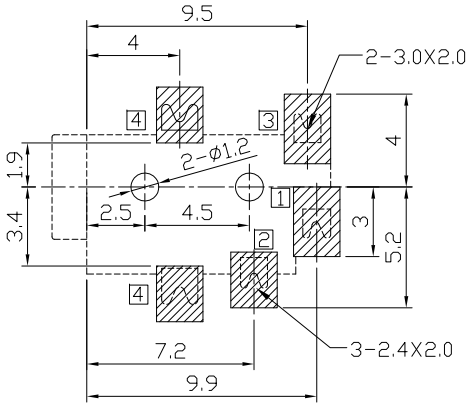

RECOMMENDED P.C.B. LAYOUT
UNSPECIFIED TOLERANCE:±0.05
(Copper-sided VIEW)

Specification:
1.Rating : DC 12V 2.5A;
2.Contact resistance: ≤30mΩ;
After test:≤50mΩ
3.Insulation resistance: ≥100MΩ (500VDC);
After test:≥50MΩ
4.Withstand voltage: 500VAC ;
5.Insertion and extraction force: 3N~30N;
6.life test: 5000cycles min;
7.Operation temperature range:-20℃~70℃
8.Preservative temperature range:-40℃~85℃

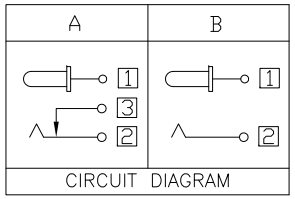

CIRCUIT DIAGRAM

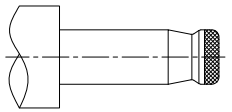

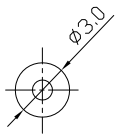

DC MATE PLUG

○: ITEM NO. □: TERMINAL NO.

NO.	PARTS	MATERIAL	Q'TY	FINISHING
⑤	Shield plate	Brass t0.25	1	Silver/Gold plating
④	Shunt terminal 3	Brass t0.25	1	Silver/Gold plating
③	Tip spring 2	Phosphor bronze t0.25	1	Silver/Gold plating
②	Center pin 1	Brass	1	Silver/Gold plating
①	Housing	PA9T UL94V-0	1	Black

TOLERANCE	ANGLES
±0.3	±2°

UNITS mm
MAT'L SEE NOTE
FINISH SEE NOTE
Q'TY

THESE DRAWINGS AND SPECIFICATIONS ARE THE PROPERTY OF ACCURATE INNOTECH INC AND SHALL NOT BE REPRODUCED, COPIED OR USED IN ANY MANNER WITHOUT THE PRIOR WRITTEN CONSENT OF ACCURATE INNOTECH INC.

雅安科技有限公司
ACCURATE INNOTECH INC.

TITLE: SMD DC POWER JACK	PART NO.: DCB0-00520
DR: Ricky 2018/06/21	DWG NO.: AB0-00520
CHKD: Ricky 2018/06/21	SCALE 1:1 / SHEET 1/1 / REV. A / CUSTOMER DRAWING
APPD:	