REV.	ECN. NO.	APPD.

RoHS Compliant 2002/95/EC

Process Capable

Halogen Free

DIMENSIONS

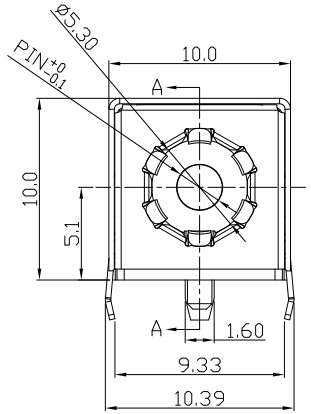

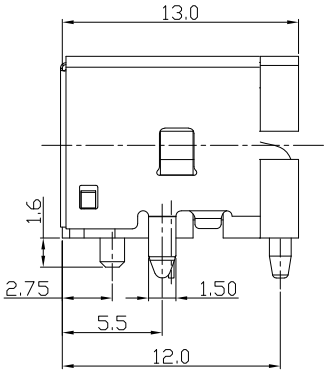

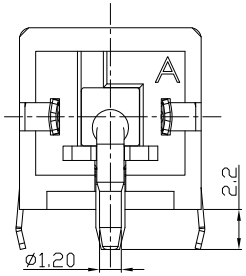

DATE CODE

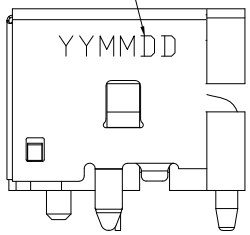

喷码示意图

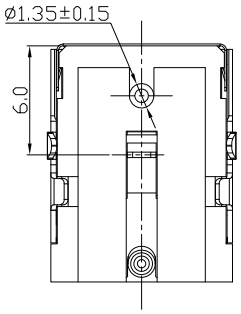

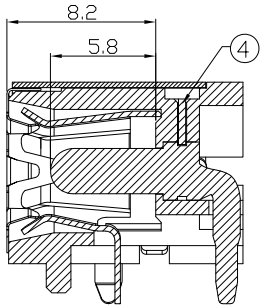

SECTION:A-A
(Long Center pin end is Circle)

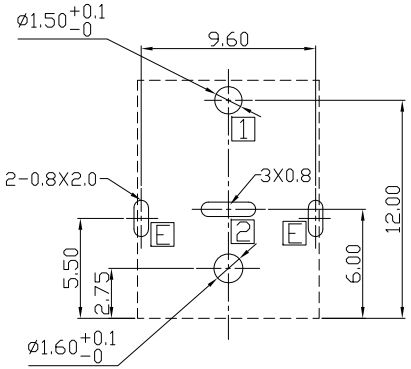

RECOMMENDED P.C.B. LAYOUT
UNSPECIFIED TOLERANCE:±0.05
(TOP VIEW)

MODEL CODE:

DCB0-0146B- B □ 10 BK S 0 1
(1) (2) (3)(4) (5) (6) (7)(8) (9)

(1):Series type:DIP DC POWER JACK.
(2):Series No.
(3):Schematic option: B
(4):Center pin diameter:
G=ø1.65 , H=ø2.0 , J=ø2.5
(5):Material of housing:
10=PA10T(Standard)
(6):Housing color:
BK=Black , 3C=Orange(157C)
(7):Terminal plating
T=Tin(Sn) , S=Silver(Ag)
(8):Special option:
0=No Special Option
D=DATE CODE
(9):Packing mode:
1=Reel packing
3=Plastic box packing

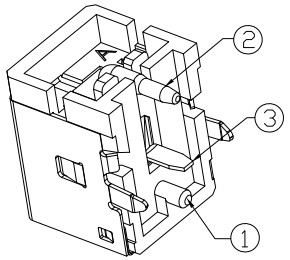

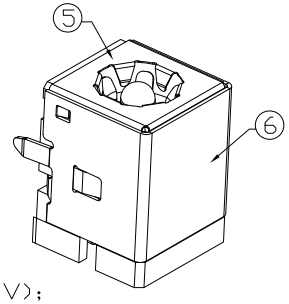

SPECIFICATION:
1.Rating : DC 20V 8A;
2.Contact resistance: ≤30mΩ;
After test:≤50mΩ
3.Insulation resistance: ≥100MΩ (DC500V);
After test:≥50MΩ
4.Withstand voltage: 500VAC;
5.Insertion and extraction force: 3-30N;
6.life test: 5,000 cycles;
7.Operation temperature range:-20°C~70°C;
8.Preservative temperature range:-40°C~85°C;

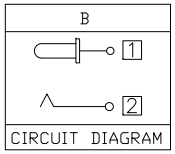

CIRCUIT DIAGRAM

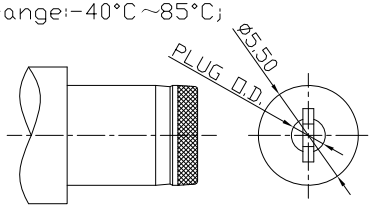

DC MATE PLUG

Model No.	G	H	J
CENTER PIN	ø1.65	ø2.0	ø2.5
PLUG O.D.	$1.70^{+0.10}_{-0.00}$	$2.05^{+0.10}_{-0.00}$	$2.55^{+0.10}_{-0.00}$

○: ITEM NO. □: TERMINAL NO.

NO.	PARTS	MATERIAL	Q'TY	FINISHING
⑥	Ground Terminal E	Copper Alloy	1	Ni plating
⑤	Shield plate	Stainless steel	1	
④	Terminal	Copper Alloy	1	
③	Tip spring 2	Copper Alloy	1	See "Ordering info"
②	Center pin 1	Zn Alloy	1	Short Center pin end is Circle Ni plating
①	Housing	High temp.Thermoplastic	1	Halogen Free, Black

TOLERANCE	ANGLES
.X ±0.50	X ±5°
.XX ±0.30	.X ±3°
.XXX ±0.15	.XX ±2°

THESE DRAWINGS AND SPECIFICATIONS ARE THE PROPERTY OF ACCURATE INNOTECH INC AND SHALL NOT BE REPRODUCED, COPIED OR USED IN ANY MANNER WITHOUT THE PRIOR WRITTEN CONSENT OF ACCURATE INNOTECH INC.

UNITS mm
MAT'L SEE NOTE
FINISH SEE NOTE
Q'TY

雅安科技有限公司
ACCURATE INNOTECH INC.

TITLE: DIP DC POWER JACK	PART NO.: DCB0-0146B
DR: Ricky 2021/09/30	DWG NO.: AB0-0146B
CHKD: Ricky 2021/09/30	SCALE 1:1 / SHEET 1/1 / REV. A / CUSTOMER DRAWING
APPD:	