REV.	ECN. NO.	APPD.

Pb Process Capable

RoHS Compliant 2002/95/EC

Halogen Free

DIMENSIONS

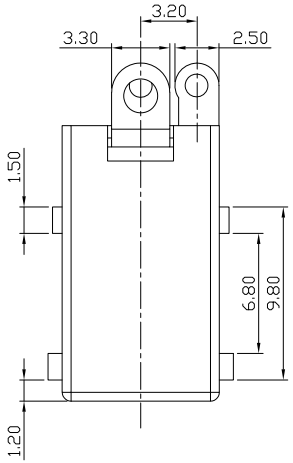

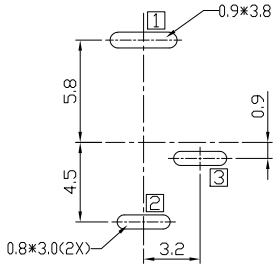

RECOMMENDED P.C.B. LAYOUT
UNSPECIFIED TOLERANCE:±0.05
(TOP VIEW)

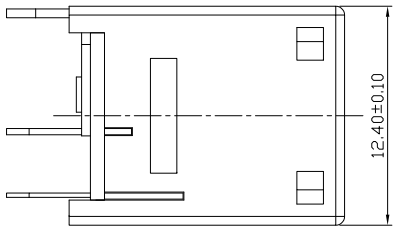

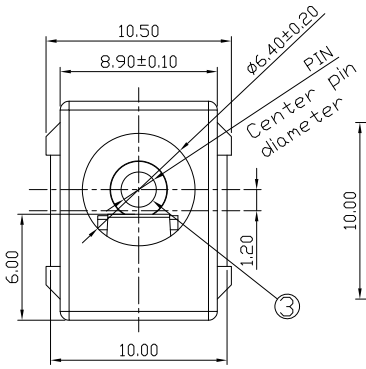

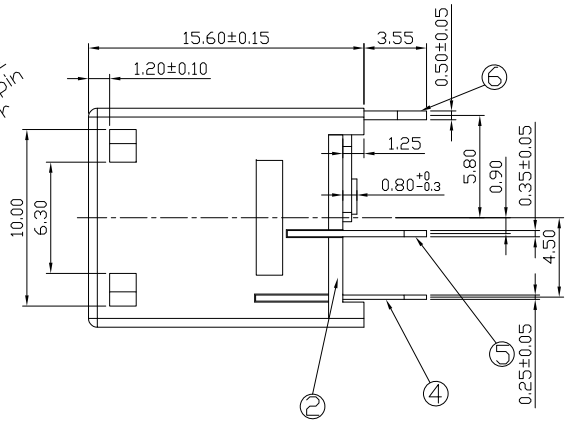

MODEL CODE:
DCB0-01700- A □ 10 BK T 0 4
(1) (2) (3)(4)(5) (6)(7)(8) (9)

(1):Series type:DIP DC POWER JACK.
(2):Series No.
(3):Schematic option: A
(4):Center pin diameter:
H=ø2.0, J=ø2.5
(5):Material of housing:
9T=PA9T 10=PA10T (Standard)
(6):Housing color:
BK=Black
(7):Terminal plating:
T=Tin(Sn)
(8):Special option:
0=No special option
(9):Packing mode:
4=Bag packing

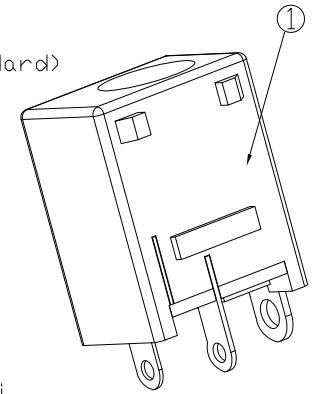

Specification:
1.Rating: DC 13.5V 2.5A;
2.Contact resistance: ≤30mΩ;
After test: ≤50mΩ
3.Insulation resistance: ≥100MΩ(500VDC);
After test: ≥50MΩ
4.Withstand voltage: 500VAC;
5.Insertion and extraction force: 3N~30N;
6.life test: 5000cycles min;
7.Operation temperature range: -20℃~70℃;
8.Preservation temperature range: -40℃~85℃;

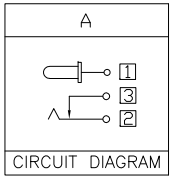

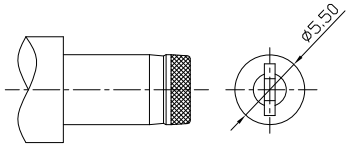

DC MATE PLUG

Model No.	H	J
CENTER PIN	ø2.0	ø2.5

○: ITEM NO. □: TERMINAL NO.

NO.	PARTS	MATERIAL	Q'TY	FINISHING
⑥	Terminal 1	Copper Alloy	1	Tin-Plating
⑤	Terminal 3	Copper Alloy	1	Tin-Plating
④	Terminal 2	Copper Alloy	1	Tin-Plating
③	Center pin	Copper Alloy	1	Ni-Plating
②	Cover	Hi-Tem. Thermoplastic	1	Black
①	Housing	Hi-Tem. Thermoplastic	1	Black

TOLERANCE		ANGLES	
.X	±0.50	X.°	±5°
.XX	±0.30	.X°	±3°
.XXX	±0.15	.XX°	±2°

THESE DRAWINGS AND SPECIFICATIONS ARE THE PROPERTY OF ACCURATE INNOTECH INC AND SHALL NOT BE REPRODUCED, COPIED OR USED IN ANY MANNER WITHOUT THE PRIOR WRITTEN CONSENT OF ACCURATE INNOTECH INC.

UNITS mm
MAT'L SEE NOTE
FINISH SEE NOTE
Q'TY

雅安科技有限公司
ACCURATE INNOTECH INC.

TITLE: DIP DC POWER JACK
PART NO.: DCB0-01700
DR: Ricky 2023/10/27
DWG NO.: AB0-01700
CHKD: Ricky 2023/10/27
APPD:

SCALE	SHEET	REV.	CUSTOMER DRAWING
1:1	1/1	A	