REV.	ECN. NO.	APPD.

Process Capable

RoHS Compliant 2002/95/EC

DIMENSIONS

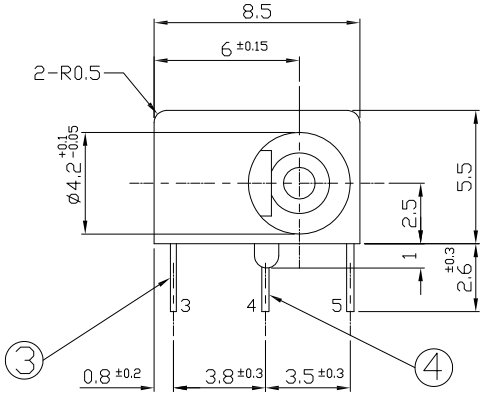

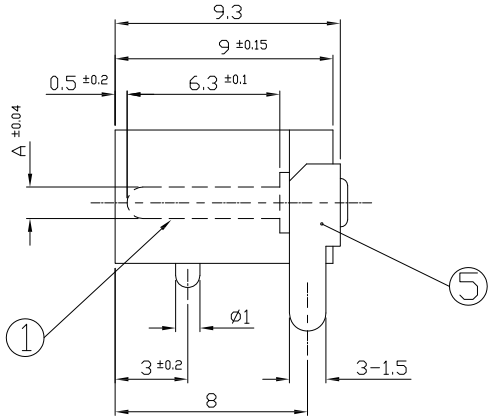

MODEL CODE:

DCD0-28000- A □ PB BK S 0 4

(1) (2) (3)(4) (5) (6) (7)(8) (9)

(1):Series type:DC POWER JACK.
(2):Series No.
(3):Schematic option: A
(4):Center pin diameter:
C=Ø1.0mm, E=Ø1.3mm
(5):Material of housing:
PB=PBT
(6):Housing color:
BK=Black
(7):Terminal plating:
S=Silver(Ag)
(8):Special option:
0=No special option
(9):Packing mode:
4=Bag packing

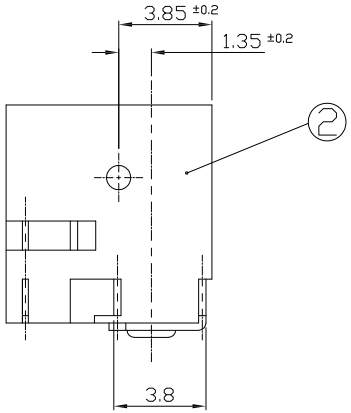

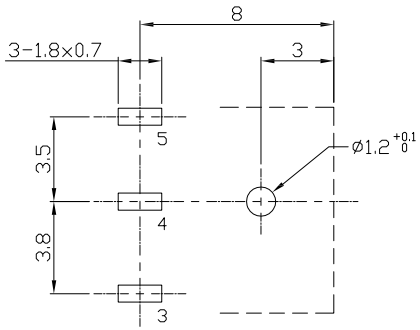

PC BOARD HOLE LAYOUT TOLS:±0.1
(VIEW FROM DIRECTION OF INSERTION TO PCB)

Specification:
1.Rating :DC 6V 0.5A.
2.Contact resistance :≤30mΩ
3.Insulation resistance :≥100MΩ (500V DC).
4.Withstanding voltage :250VAC.
5.Insertion and extraction force :0.3～3Kgs.
6.Life test :5,000 cycles min.
7.Operation temperature range:-25°C～70°C

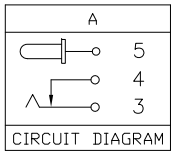

Model No.	C	E
CENTER PIN(A)	Ø1.0mm	Ø1.3mm
PLUG O.D.(B)	1.1mm	1.4mm

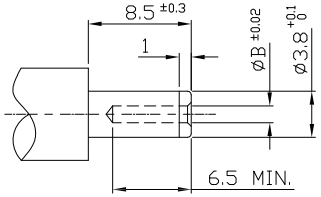

DC MATE PLUG

Bill of materials:

NO.	PARTS	MATERIAL	Q'TY	FINISHING
⑤	EARTH TERMINAL	BRASS 0.3t	1	Ag-PLATED
④	SHUNT TERMINAL	BRASS 0.3t	1	Ag-PLATED
③	TIP SPRING	ZINC COPPER ALLOY 0.25t	1	Ag-PLATED
②	CASING	PBT/GF	1	BLACK
①	PIN	BRASS	1	Ni-PLATED

TOLERANCE	ANGLES
X<=5=±0.10	
X> 5=±0.30	

THESE DRAWINGS AND SPECIFICATIONS ARE THE PROPERTY OF ACCURATE INNOTECH INC AND SHALL NOT BE REPRODUCED, COPIED OR USED IN ANY MANNER WITHOUT THE PRIOR WRITTEN CONSENT OF ACCURATE INNOTECH INC.

UNITS mm
MAT'L SEE NOTE
FINISH SEE NOTE
Q'TY

雅安科技有限公司
ACCURATE INNOTECH INC.

TITLE: DC POWER JACK	PART NO.: DCD0-28000
DR: Ricky 2019/08/27	DWG NO.: AD0-28000
CHKD: Ricky 2019/08/27	
APPD:	

SCALE	SHEET	REV.	CUSTOMER DRAWING
1:1	1/1	A	