REV.	ECN. NO.	APPD.

Pb Process Capable

RoHS Compliant 2002/95/EC

DIMENSIONS

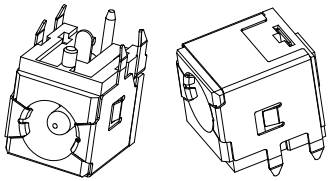

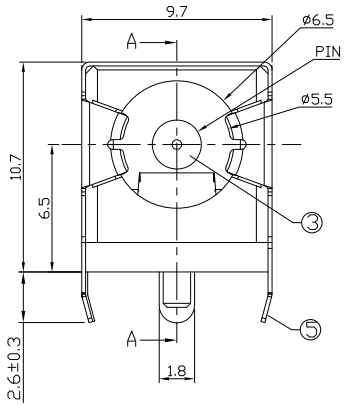

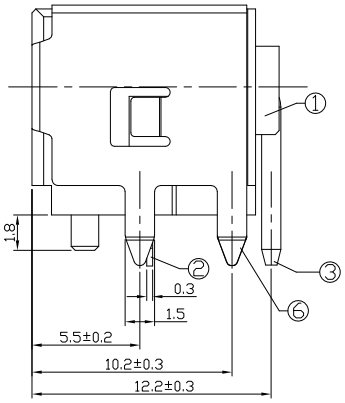

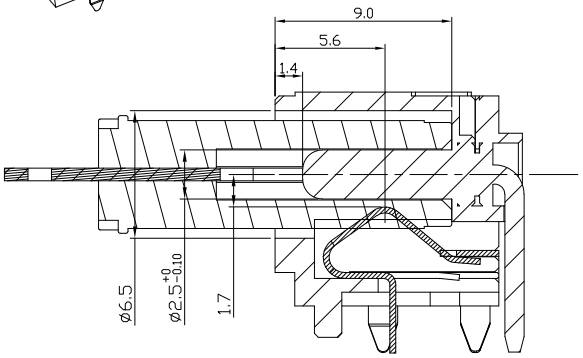

SECTION A-A

MODEL CODE:

DCS0-0335C- A □ 9T BK T 0 3

(1) (2) (3)(4) (5) (6) (7)(8) (9)

(1):Series type:DIP DC POWER JACK.
(2):Series No.
(3):Schematic option: A
(4):Center pin diameter:
H=ø2.0 , J=ø2.5
(5):Material of housing:
9T=PA9T
(6):Housing color:
BK=Black
(7):Terminal plating
T=Tin(Sn)
(8):Special option:
0=No special option
(9):Packing mode:
3=Plastic box packing

Specification:
1.Rating :DC 24V 10A.
2.Contact resistance :≤100mΩ.
3.Insulation resistance :≥100MΩ (DC500V).
4.Withstanding voltage: 500VAC .
5.Insertion and extraction force: 3~30N.
6.life test: 5000cycles min.
7.Operation temperature range:-25°C~85°C

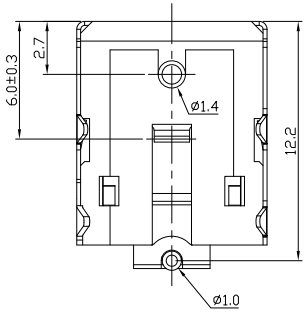

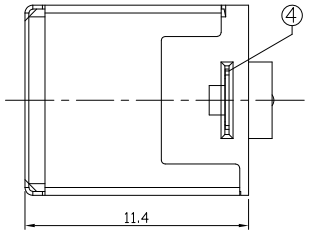

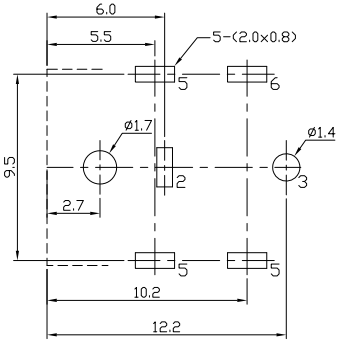

P.C.B LAYOUT
TOP VIEW

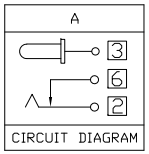

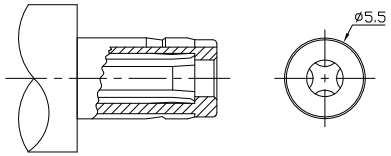

DC MATE PLUG

Model No.	H	J
CENTER PIN	ø2.0	ø2.5

Bill of materials:

NO.	PARTS	MATERIAL	Q'TY	FINISHING
6	CONTACT FOOT	C2680-EH	1	Ni:50u"Min,Tin:100u"Min
5	CONTACT FOOT	SUS301-H	1	Ni:50u"Min
4	STOPPER	SUS301-H	1	N/A
3	PIN	H59-H	1	Ni:50u"Min
2	SPRING PIECE	C5210-EH	1	Ni:50u"Min,Tin:100u"Min
1	HOUSING	PA9T GN2330	1	BLACK UL94-V0

TOLERANCE	ANGLES
.X ± 0.3	X°.±5°
.XX ± 0.2	.X°±3°
.XXX ± 0.1	

THESE DRAWINGS AND SPECIFICATIONS ARE THE PROPERTY OF ACCURATE INNOTECH INC AND SHALL NOT BE REPRODUCED, COPIED OR USED IN ANY MANNER WITHOUT THE PRIOR WRITTEN CONSENT OF ACCURATE INNOTECH INC.

UNITS mm
MAT'L SEE NOTE
FINISH SEE NOTE
Q'TY

雅安科技有限公司
ACCURATE INNOTECH INC.

TITLE: DIP DC POWER JACK	PART NO.: DCS0-0335C
DR: Ricky 2019/03/21	DWG NO.: ASS-0335C
CHKD: Ricky 2019/03/21	SCALE 1:1 / SHEET 1/1 / REV. A / CUSTOMER DRAWING
APPD:	