Pb Process Capable

RoHS Compliant 2002/95/EC

REV.	ECN. NO.	APPD.

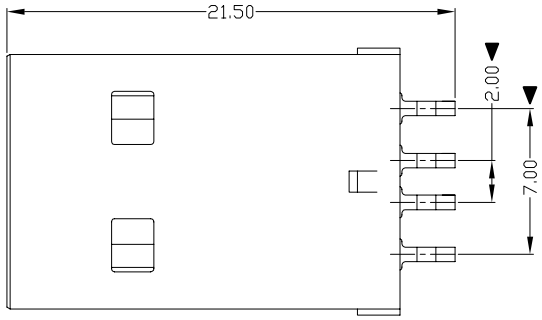

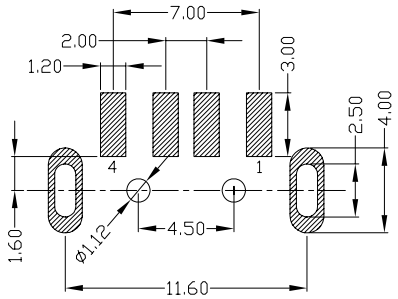

RECOMMENDED PCB LAYOUT

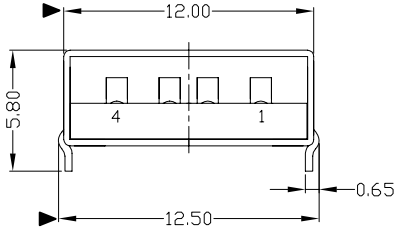

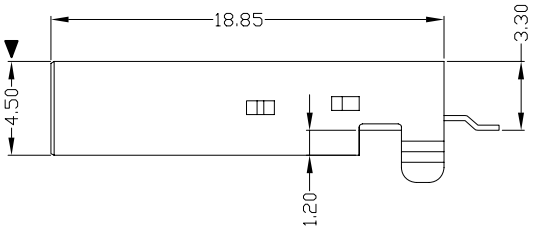

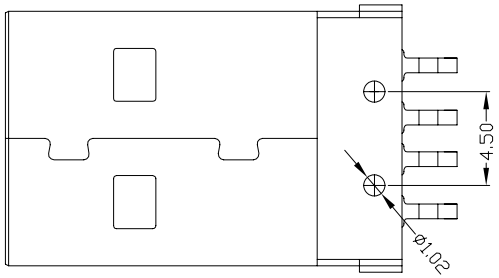

NOTES:

1. ELECTRICAL:
   1) VOLTAGE CURRENT RATING:2AMP,30V AC;
   2) INSULATION RESISTANCE: 1000MΩ MIN;
   3) CONTACT RESISTANCE: 30mΩ MAX;
   4) WITHSTANDING VOLTAGE: 500V AC;
   5) OPERATING TEMPERATURE:-55°C TO +85°C.
2. Mechanical:
   1) Mating Force: 35N MAX
   2) Unmating Force: 10N MIN.
3. NOTE:1.DIMENSIONS MARKED "▼" TO BE CHECKED BY Q.C & IPQC.
4. PART NO.

USAM-04*N-4*H80

- 1:Au 1U"
- 6:Au 30U"
- W:WHITE
- B:BLACK
- 1:PBT
- 2:PA6T
- 3:PA9T
- 4:LCP

Bill of materials:

NO	PARTS	MATERIAL	QTY	FINISHING
3	HOUSING	LCP	1	UL94V-0
2	SHELL	SPCC	1	PLATED NICKEL
1	TERMINAL	COPPER ALLOY	4	PLATED GOLD/TIN

X. ±0.35	X.° ±2°	UNITS mm	
.X ±0.3	.X° ±1°	MAT'L SEE NOTE	
.XX ±0.25	.XX°		
.XXX ±0.15	.XXX°	FINISH SEE NOTE	
		Q'TY	

THESE DRAWINGS AND SPECIFICATIONS ARE THE PROPERTY OF ACCURATE INNOTECH INC .AND SHALL NOT BE REPRODUCED. COPIED OR USED IN ANY MANNER WITHOUT THE PRIOR WRITTEN CONSENT OF ACCURATE INNOTECH INC.

雅安科技有限公司
ACCURATE INNOTECH INC.

TITLE: USB AM 90° SMT 弯脚 胶芯1.2	PART NO.: USAM-04*N-4*H80
DR: gan 2012/7/04	DWG NO.: AII-H80
CHKD: gan 2012/7/04	SCALE 1:1 / SHEET 1/1 / REV. B / CUSTOMER DRAWING
APPD:	