Pb Process Capable

RoHS Compliant 2002/95/EC

REV.	ECN. NO.	APPD.

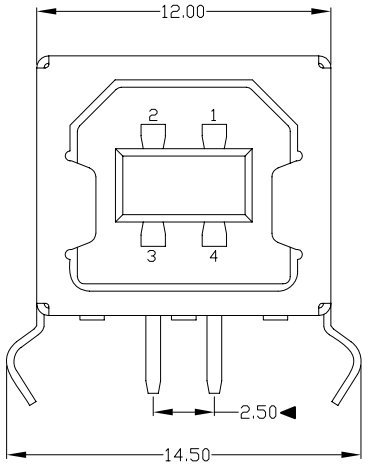

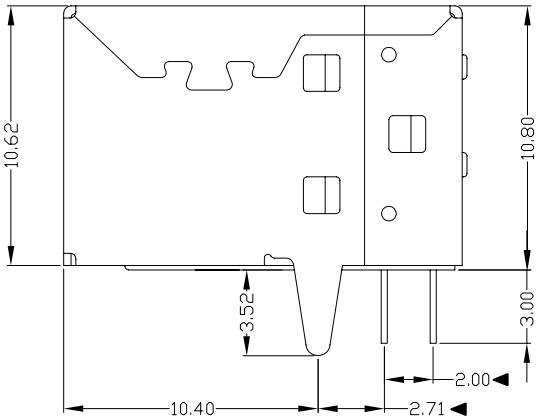

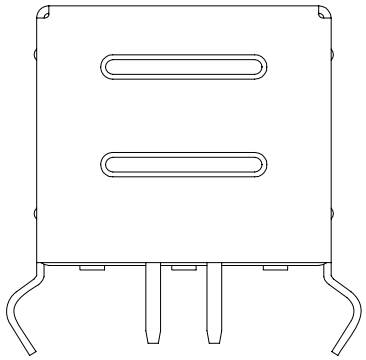

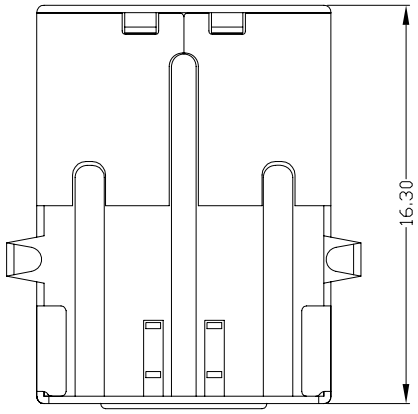

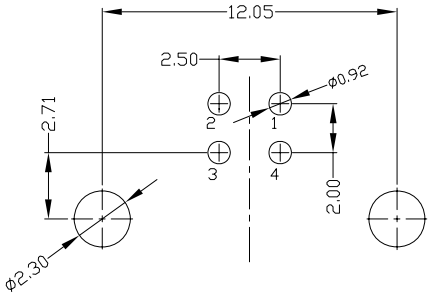

RECOMMENDED PCB LAYOUT

NOTES:

1. ELECTRICAL:
   1) VOLTAGE CURRENT RATING:2AMP,30V AC;
   2) INSULATION RESISTANCE: 1000MΩ MIN;
   3) CONTACT RESISTANCE: 30mΩ MAX;
   4) WITHSTANDING VOLTAGE: 500V AC;
   5) OPERATING TEMPERATURE:-55°C TO +85°C.
2. Mechanical:
   1) Mating Force: 35N MAX
   2) Unmating Force: 10N MIN.
3. NOTE:1.DIMENSIONS MARKED "▼" TO BE CHECKED BY Q.C & IPQC.
4. PART NO.

USBF-04*N-1*R85

- 1:Au 1U"
- 6:Au 30U"
- W:WHITE
- B:BLACK
- 1:PBT
- 2:PA6T
- 3:PA9T
- 4:LCP

Bill of materials:

NO	PARTS	MATERIAL	QTY	FINISHING
4	BACK COVER	SPCC	1	PLATED NICKEL
3	HOUSING	PBT	1	UL94V-0
2	SHELL	COPPER ALLOY	1	PLATED NICKEL
1	TERMINAL	COPPER ALLOY	4	PLATED GOLD/TIN

X. ±0.35	X.° ±2°	UNITS mm	雅安科技有限公司 ACCURATE INNOTECH INC.
.X ±0.3	.X° ±1°	MAT'L SEE NOTE	TITLE: USB B/F 90° DIP (弯脚)
.XX ±0.25	.XX°		PART NO.: USBF-04*N-1*R85
.XXX ±0.15	.XXX°	FINISH SEE NOTE	DR: gan 2012/7/04
		Q'TY	CHKD: gan 2012/7/04
			APPD:

THESE DRAWINGS AND SPECIFICATIONS ARE THE PROPERTY OF ACCURATE INNOTECH INC AND SHALL NOT BE REPRODUCED, COPIED OR USED IN ANY MANNER WITHOUT THE PRIOR WRITTEN CONSENT OF ACCURATE INNOTECH INC.

DWG NO.	SCALE	SHEET	REV.	
AII-R85	1:1	1/1	B	CUSTOMER DRAWING