Process Capable

RoHS Compliant 2002/95/EC

REV.	ECN. NO.	APPD.

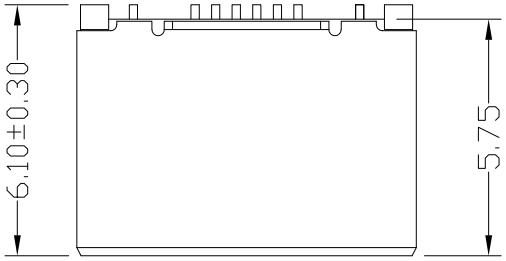

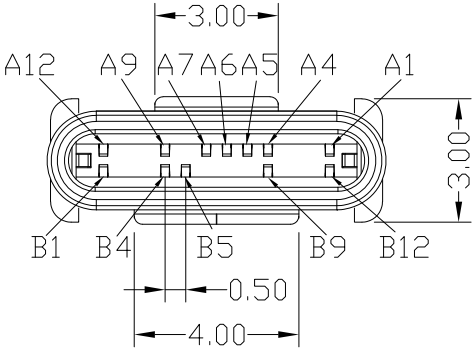

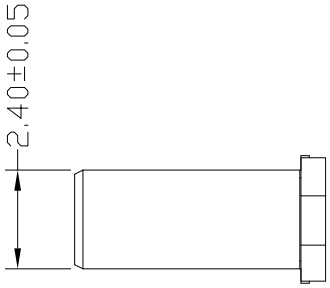

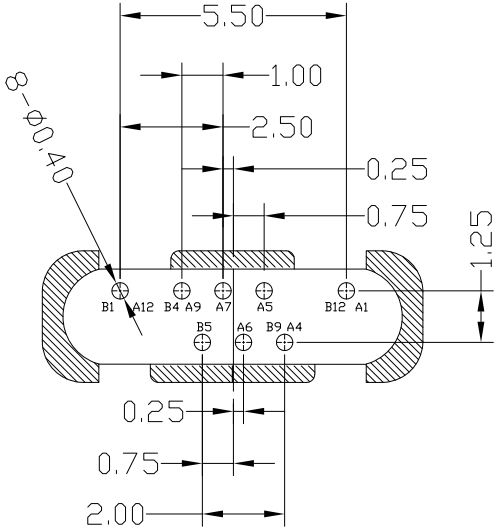

RECOMMENDED P.C.B. LAYOUT

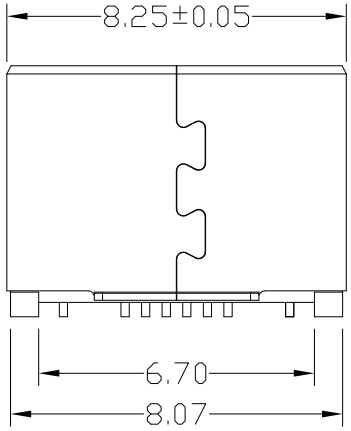

PIN	SIGNAL NAME	PIN	SIGNAL NAME
A1	GND	B12	GND
A4	VBUS	B9	VBUS
A5	CC1	B8	
A6	DP1	B7	
A7	DN1	B6	
A8		B5	CC2
A9	VBUS	B4	VBUS
A12	GND	B1	GND

NOTES:
1. ELECTRICAL:
   1) CURRENT RATING: 1.5AMP MAX;
   2) INSULATION RESISTANCE: 100MΩ MIN;
   3) CONTACT RESISTANCE: 50mΩ MAX;
   4) WITHSTANDING VOLTAGE: 100V AC;
   5) OPERATING TEMPERATURE:-30°C TO +85°C.
2. Mechanical:
   1) Mating Force: 20N MAX.
   2) Unmating Force: 6N MIN.
3. DIMENSIONS MARKED "▼" TO BE CHECKED BY Q.C & IPQC.

4.PART NO.

USCM-121N-4BP60

W:WHITE
B:BLACK

1:Au 1U"
2:Au 3U"
5:Au 15u"
6:Au 30U"

1:PBT
2:PA6T
3:PA9T
4:LCP

NO	PARTS	MATERIAL	QTY	FINISHING
5				
4				
3	SHELL	STAINLESS STEEL	1	PLATED NICKEL
2	TERMINAL	COPPER ALLOY	12	PLATED GOLD/TIN
1	HOUSING	LCP+30%GF	1	UL94V-0

.X	±0.30	.X°	±3°
.XX	±0.20	.XX°	
.XXX	±0.15	.XXX°	

UNITS mm

MAT'L SEE NOTE

FINISH SEE NOTE

Q'TY

THESE DRAWINGS AND SPECIFICATIONS ARE THE PROPERTY OF ACCURATE INNOTECH INC .AND SHALL NOT BE REPRODUCED. COPIED OR USED IN ANY MANNER WITHOUT THE PRIOR WRITTEN CONSENT OF ACCURATE INNOTECH INC

雅安科技有限公司
ACCURATE INNOTECH INC.

TITLE: USB TYPE CM 简易短体公头

PART NO.: USCM-12XN-4BP60

DR: Ricky 2023/05/10

CHKD: Ricky 2023/05/10

APPD:

DWG NO.: AII-P60

SCALE	SHEET	REV.	
1:1	1/1	B	CUSTOMER DRAWING